REVISIONS
2:

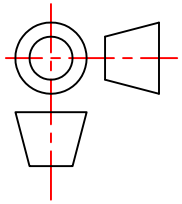

CAPACITOR LEADS AS SHORT AS POSSIBLE SOLDERED TO CAPACITOR & SLEEVING INSERTED INTO CAPACITOR LID

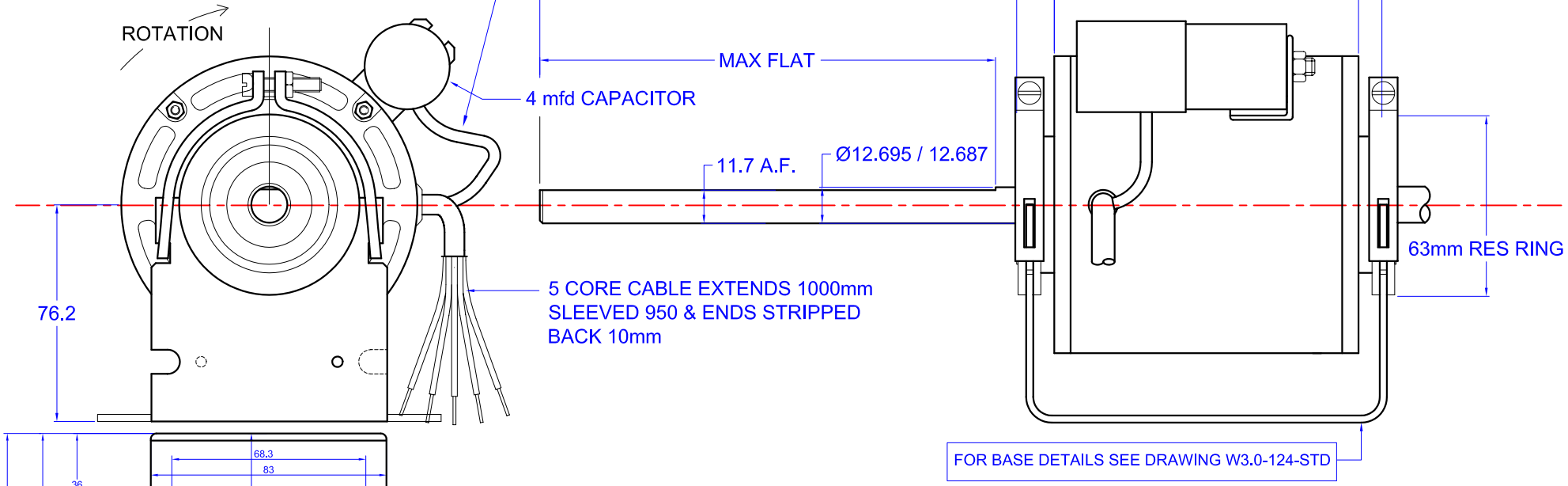

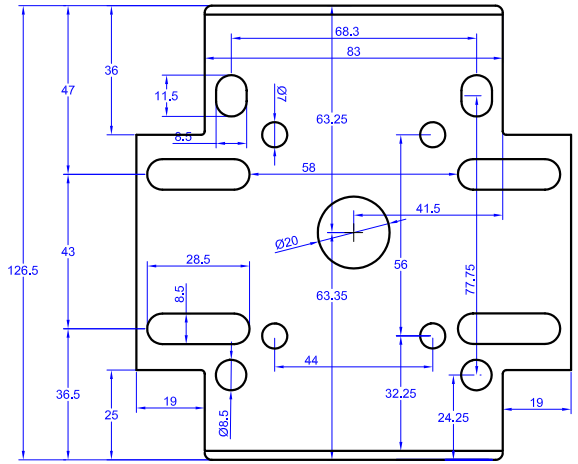

REMCO ELECTRIC MOTORS
35-4-75/3DS

WHITE	-	NEUTRAL
BLACK	-	HIGH SPEED
BLUE	-	MED SPEED
RED	-	LOW SPEED
GRN/YELLOW	-	EARTH

REMCO CE

Part No. 35-4-75/3DS
220/240v - 50/60hz - 0.7A
75watts - 1200rpm

ALL DIMENSIONS IN mm UNLESS STATED OTHERWISE
N.T.S. - DO NOT SCALE

DWG NO. ---					
J.SOMERVILLE DRW BY	CHECKED BY	APPROVED BY	354753ds.dwg FILENAME	16-08-2004 DATE	DO NOT SCALE
REMCO PRODUCTS LIMITED			35-4-75/3DS		
				1.0 ISSUE	1 / 1 SHEET